Allen & Heath Limited
Kernick Industrial Estate
Penryn, Cornwall,
TR10 9LU, UK
www.allen-heath.com

Technical Datasheet

Overview

- **4+1 channel analogue mixer**
- **Internal Xone:FX engine**
- **Classic Xone VCF Filter with HPF, BPF, LPF and adjustable frequency and resonance control**
- **Four channels with 3-source Phono/Line/USB inputs**
- **20 channel 24bit 96kHz USB2 internal soundcard**
- **Send/Return and Master Insert mode connections for external FX (Line or Hi-Z)**
- **Dedicated Microphone/Aux input/USB Return channel with peak level Indicator**
- **3-band, total kill EQ on all channels**
- **MIDI Sync/Out**
- **Record out (USB and unbalanced RCA)**
- **2 GND earth terminal posts for turntables**
- **X:LINK for plug n' play connection to Xone:K series controllers**

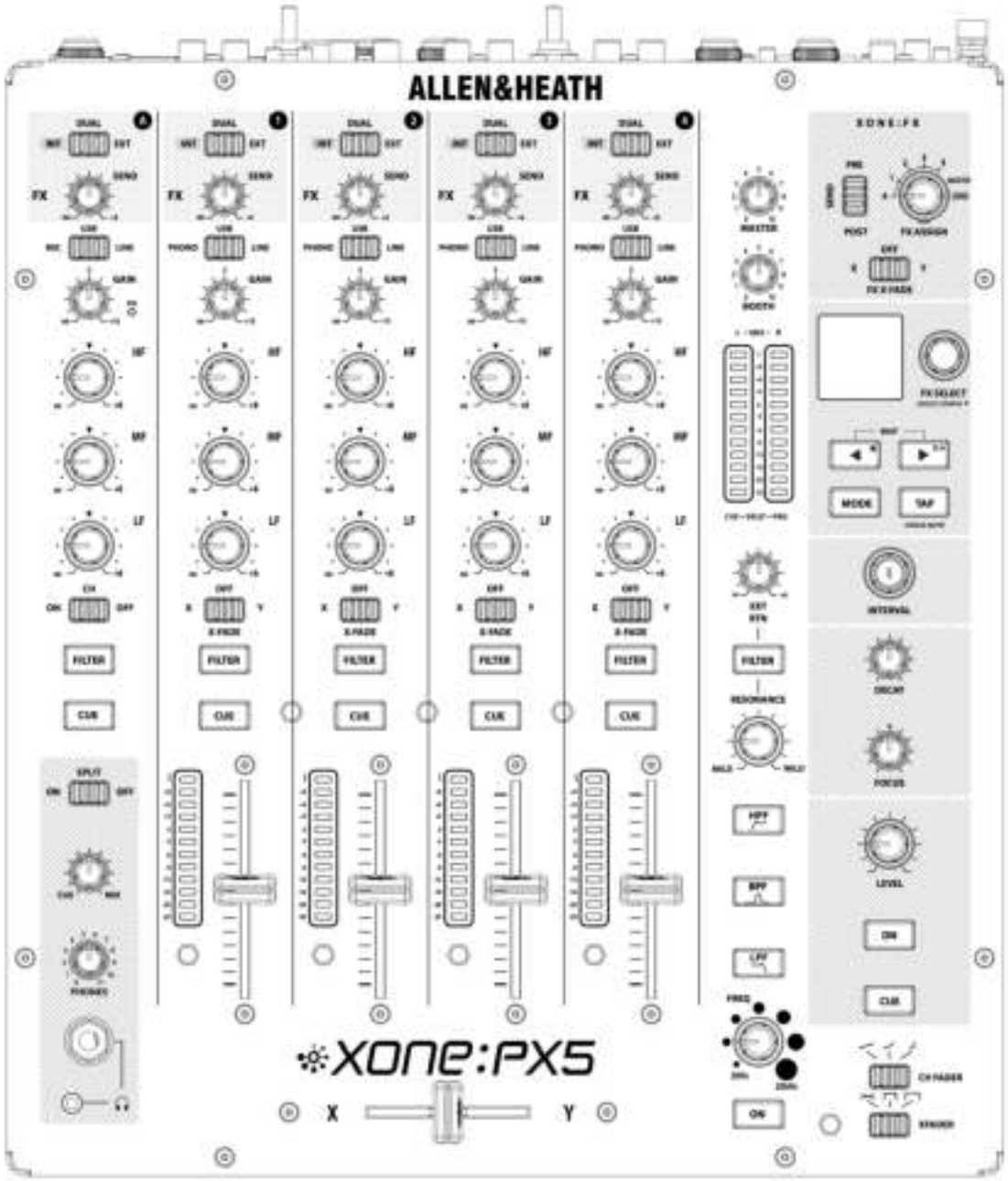
ALLEN&HEATH
XONE:PX5
X
Y

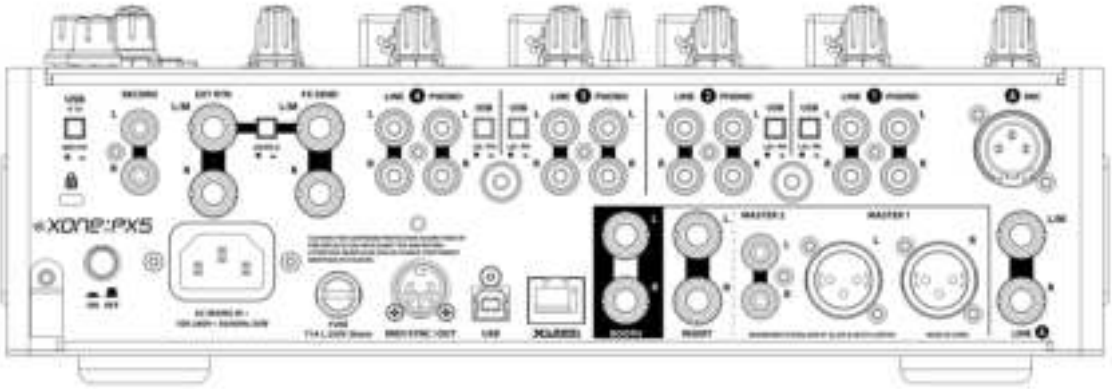
XONE:PX5

Dimensions

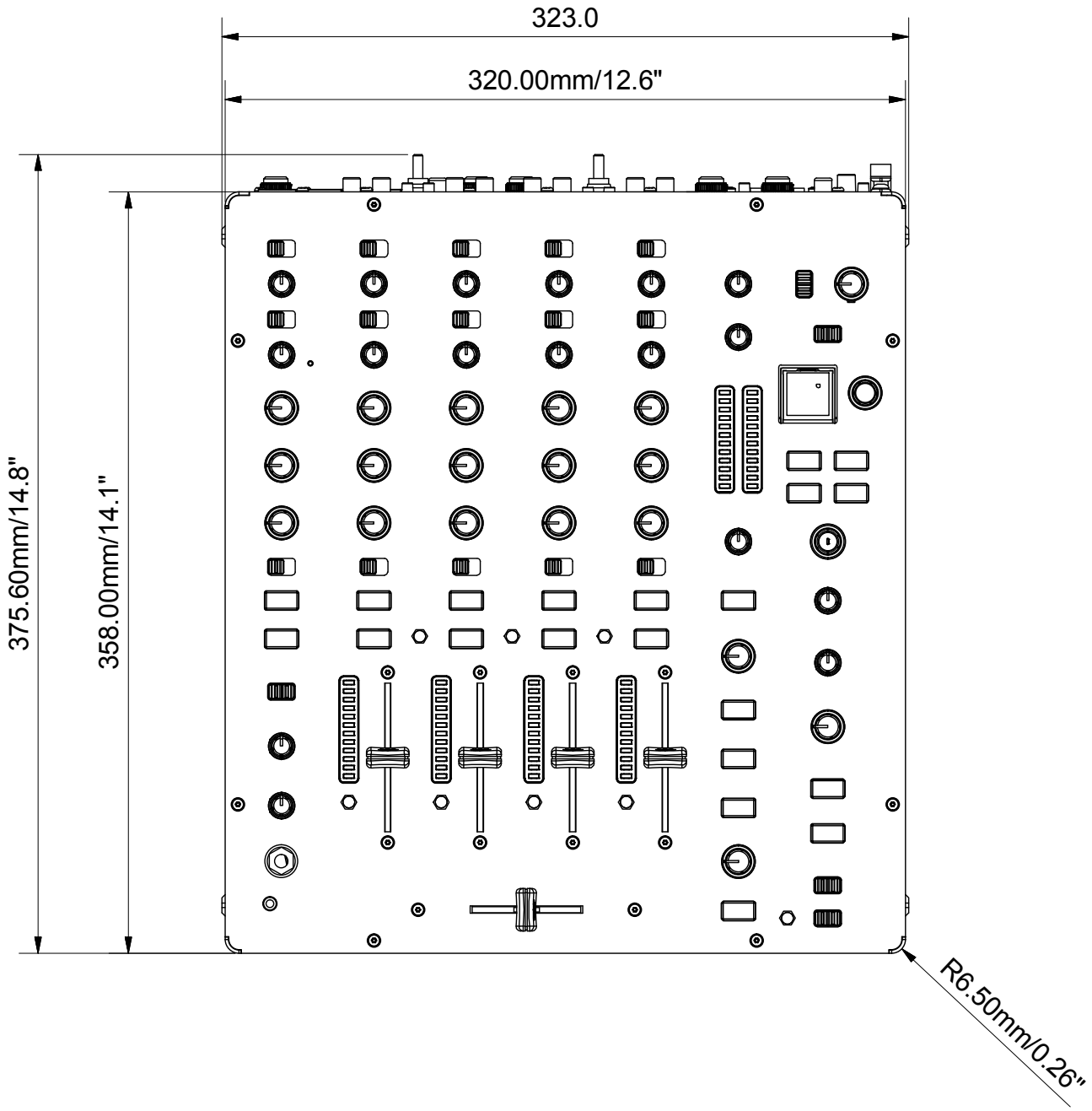

Dimensions

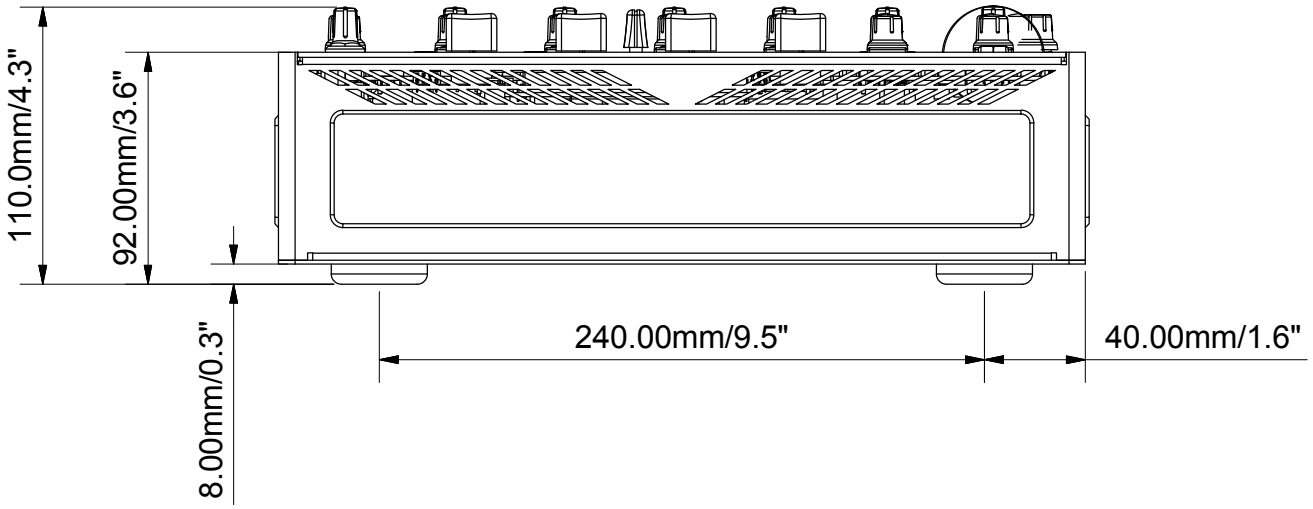

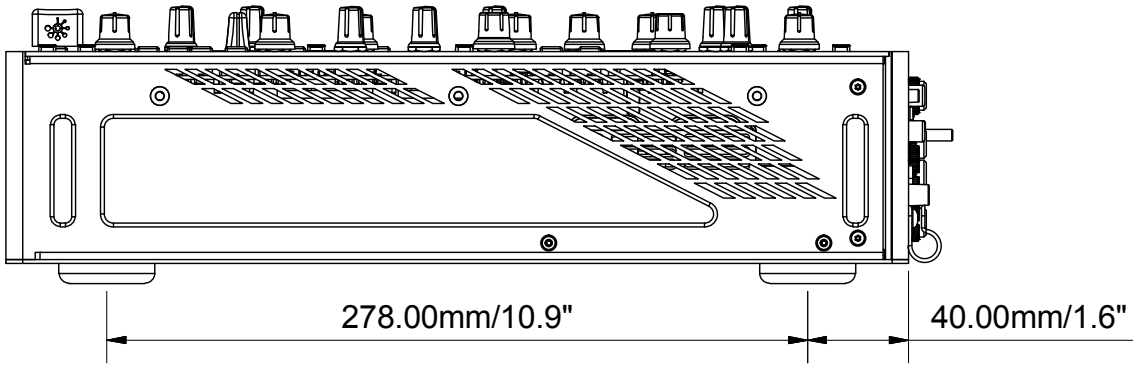

Xone:PX5 - Without Box	Xone:PX5 - With Box
Width – 320mm/12.6”	Width – 450mm/17.7”
Depth – 375.6mm/14.8”	Depth – 530mm/20/9”
Height – 110mm/4.3”	Height – 190mm/7.5”
Weight – 5.2kg/11.5lbs	Weight – 6.6kg/14.6lbs

A&E Specifications

The mixer will be a compact analog mixer with 4 input channels and an auxillary input channel mixing to a stereo Main Mix output. The mixer will weigh 5.2kg (11.5lbs).
The mixer will feature a 20 channel, USB 2, 24bit/96kHz soundcard which will be class compliant for mac. The soundcard will offer 10 inputs and 10 outputs.
Each of the 4 main input channels will have 4 RCA line inputs, 4 RCA phono inputs, 4 USB soundcard inputs, and the auxillary channel will have a ¼" TRS jack input, an XLR mic input and a USB soundcard input.
All of the input channels will be equipped with 3-band total kill EQ and the 4 main input channels will have their own dedicated channel fader with adjustable curve settings and 12 segment LED metering.
Each of the 5 input channels will feature a cue button that will assign the input of the selected channel to the dedicated headphone monitoring section, enabling pre-listening of the selected source. The headphone monitoring section will feature split cue functionality allowing for the cue signal to be monitored in the left side of the headphones and the main mix output to be monitored in the right side of the headphones. The headphone monitoring section will feature a headphone volume level control and 3.5mm and ¼" headphone connections.
The mixer will feature a replaceable cross fader and will be assignable to the 5 input channels by a dedicated 3-position switch per channel. The cross fader will have 3 curve settings and be Innofader compatible.
The mixer will feature a VCF filter system with HPF, BPF and LPF options with adjustable frequency and resonance controls. It will be assignable to each of the 5 input channels by a dedicated button per channel.
The mixer will feature an internal FX engine offering a wide range of different FX types with dedicated on/off button, interval, decay, focus and level parameters. It will feature its own cue function to pre-listen to the FX. The FX engine will be assignable to the 5 input channels and the master channel as an insert effect.
The mixers internal FX engine will also be able to operate as an effect send. Each of the 5 input channels will have their own dedicated send knob and when in send mode, the FX engine will be pre or post fade selectable. It will also be possible to assign the send effect to the cross fader.
The mixer will feature an external send and return with ¼" TRS connectivity as well as a LN/Hi-Z input switch for integrating legacy hardware.
The external send and return will be assignable to the VCF filter with its own dedicated volume knob. Each of the 5 input channels will be able to be sent to the external send and return using a dedicated send knob per channel.
The internal FX engine and the external send and return will be able to operate independently or in dual mode. This feature will be assignable on each of the 5 input channels by a 3-position switch: Internal < Dual > External.
The mixer will feature a master ¼" TRS insert which can be used for external effects and dynamic processing.
The mixer will feature a balanced XLR master output, a secondary master output on RCA, and a booth output on ¼" TRS.
The mixer will feature a dedicated RCA record output.
The mixer will be MIDI assignable and it will be possible to change the MIDI channel number that it transmits on.
The mixer will feature an X-Link connection for connecting Xone K-Series controllers for expanded MIDI functionality.
The mixer will feature a 5-pin DIN MIDI connection for sending external MIDI clock and synchronising external MIDI instruments such as drum machines and synthesizers, with adjustable DIN offset, play, pause, stop and tempo bend controls.
The mixer will feature auto BPM detection as well as manual and tap tempo control along with MIDI clock send and receive through the USB connection.
The mixer will have a dedicated master level control with a 12 segment, LED meter.
The mixer will feature a dedicated booth level control.
The mixer will feature 2 earth ground terminals for connecting up to 4 turntables.
The mixer will have 20db of pro standard headroom.
The mixer will have a built in power supply accepting AC mains voltages of 100~240V, 50/60 Hz, 35W max via an earthed 3-pin IEC connector mounted on the rear chassis.

The mixer will have a switch near the mains inlet to isolate the mixer from the incoming mains supply.

The mixer will be the Xone:PX5.

Block Diagram

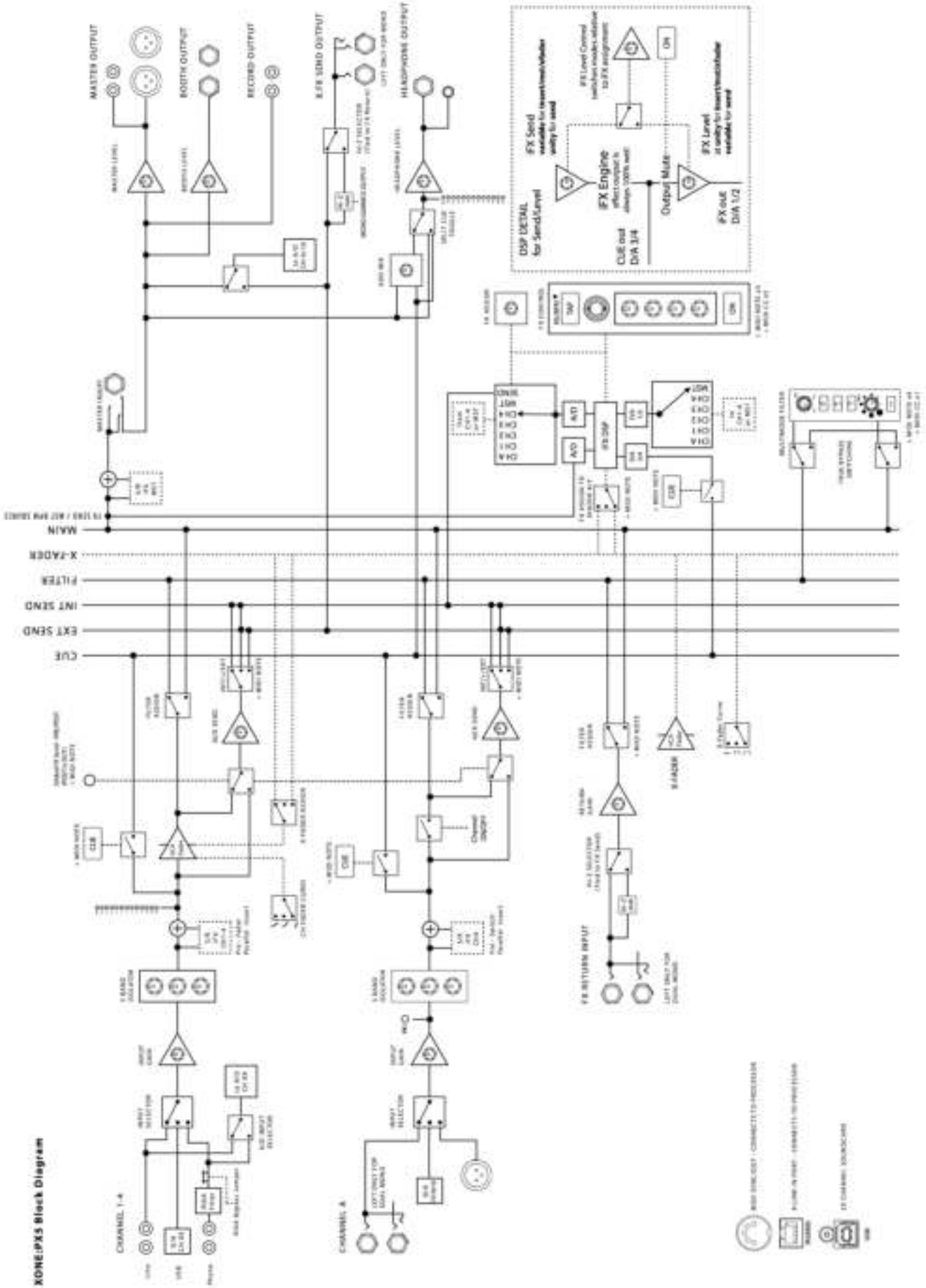

Mixer Specification

Model	Xone:PX5
Type	Analog
Channels	4 + 1
EQ	3-band / Total Kill (CH 1-4 + CH A)
USB Soundcard	20 Channel (10 in / 10 out) USB2 / Class Compliant 24bit / 96kHz 1 x MIDI IN 1 x MIDI Out
Line Inputs	4 x RCA (CH 1-4) 1 x 1/4" TRS (CH A) Mono/Stereo
Phono Inputs	4 x RCA (CH 1-4) LN/PH Switch for DVS
USB Inputs	5 x USB (CH 1-4 + CH A)
Mic Input	1 x XLR
Master Output	1 x XLR (Balanced)
Master 2 Output	1 x RCA (Un-balanced)
Booth Output	1 x 1/4" TRS
Record Output	1 x RCA (Un-balanced)
Master Insert	1 x 1/4" TRS
MIDI Sync/Out	1 x 5-Pin DIN DIN Offset Control
Send/Return I/O	1 x 1/4" TRS Send 1 x 1/4" TRS Return 1 x LN/Hi-Z Switch
Internal Xone:FX	Yes
Hybrid FX Mode	Yes (Internal < Dual > External)
FX Send	1 x Pre/Post Selectable (CH 1-4 + CH A)
Filter	1 x VCF Filter HPF / BPF / LPF Adjustable Frequency & Resonance Assignable CH 1-4 + CH A + External Return
X-Link	1 x RJ45
Headphones	1 x 1/4" 1 x 3.5mm Split Cue Monitoring
Channel Faders	60mm VCA / Replaceable
Chanel Meters	12 Segment LED
Channel Fader Curve	3 Types
X-Fader	45mm VCA / Replaceable / Innofader Compatible
X-Fader Curve Settings	3 Types
MIDI Clock	Send + Receive Start / Stop / Pause / Tempo Bend (-/+)
MIDI Assignable	Yes (MIDI CC / MIDI Notes)
BPM Detection	Auto / Manual / Tap Tempo
Earth Ground Terminals	x 2
Headroom	20dB
AC Mains	100 to 240V AC 50/60Hz Consumption 35W max
Mains Adaptor	3 pin IEC socket with cable clamp
Fuse Rating	250V AC T1AL 20mm
Height	4.3"
Width	12.6"
Depth	14.8"
Weight	11.5 lbs.